EURO-WALL, LLC

MS-MULTISLIDE SYSTEM (WZ3) (IMPACT)

GENERAL NOTES:

1. THE PRODUCT SHOWN HEREIN IS DESIGNED AND MANUFACTURED TO COMPLY WITH THE CURRENT FLORIDA BUILDING CODE (FBC), **EXCLUDING** HVHZ AND HAS BEEN EVALUATED ACCORDING TO THE FOLLOWING:
   - TAS 201-94
   - TAS 202-94
   - TAS 203-94
2. ADEQUACY OF THE EXISTING STRUCTURAL CONCRETE/MASONRY, 2X AND METAL STUD FRAMING AS A MAIN WIND FORCE RESISTING SYSTEM CAPABLE OF WITHSTANDING AND TRANSFERRING APPLIED PRODUCT LOADS TO THE FOUNDATION IS THE RESPONSIBILITY OF THE ENGINEER OR ARCHITECT OF RECORD FOR THE PROJECT OF INSTALLATION.
3. 1X AND 2X BUCKS (WHEN USED) SHALL BE DESIGNED AND ANCHORED TO PROPERLY TRANSFER ALL LOADS TO THE STRUCTURE. BUCK DESIGN AND INSTALLATION IS THE RESPONSIBILITY OF THE ENGINEER OR ARCHITECT OF RECORD FOR THE PROJECT OF INSTALLATION.
4. THE INSTALLATION DETAILS DESCRIBED HEREIN ARE GENERIC AND MAY NOT REFLECT ACTUAL CONDITIONS FOR A SPECIFIC SITE. IF SITE CONDITIONS CAUSE INSTALLATION TO DEVIATE FROM THE REQUIREMENTS DETAILED HEREIN, A LICENSED ENGINEER OR ARCHITECT SHALL PREPARE SITE SPECIFIC DOCUMENTS FOR USE WITH THIS DOCUMENT.
5. APPROVED IMPACT PROTECTIVE SYSTEM **IS NOT REQUIRED** TO PROTECT THIS PRODUCT IN WIND ZONE 3 OR LESS.
6. APPROVED IMPACT PROTECTIVE SYSTEM **IS REQUIRED** TO PROTECT THIS PRODUCT IN WIND ZONE 4.
7. DOOR FRAME MATERIAL: EXTRUDED ALUMINUM (6063-T5).
8. GLASS MEETS THE REQUIREMENTS OF ASTM E1300 GLASS CHARTS. SEE SHEET 1 FOR GLAZING DETAILS.
9. DISSIMILAR METALS INCLUDING FASTENERS THAT MAY COME INTO CONTACT WITH ALUMINUM COMPONENTS SHALL BE PROTECTED IN ACCORDANCE WITH THE FBC.

NOTE: WHEN INSTALLED AT A LOCATION PROTECTED BY AN OVERHANG SUCH THAT:

OVERHANG (OH) RATIO = OH LENGTH ÷ OH HEIGHT IS $\geqq$1.0, WATER INFILTRATION REQUIREMENT DOES NOT NEED TO BE MET

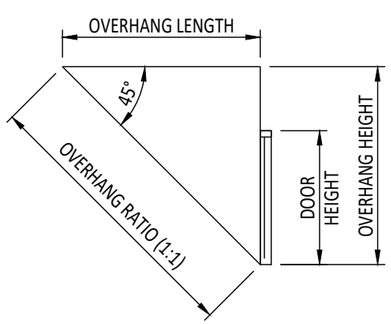

DESIGN PRESSURE RATING			
MAX. UNIT DIMENSIONS	DESIGN PRESSURE	WATER TEST PRESSURE	MISSILE IMPACT RATING
SEE SHEET 4		10.5 PSF	LARGE & SMALL MISSILE IMPACT

TABLE OF CONTENTS

SHEET	SHEET DESCRIPTION
1	GENERAL NOTES & GLAZING DETAILS
2	ELEVATIONS
3	ANCHOR LAYOUT
4	DESIGN PRESSURE TABLES
5	VERTICAL SECTIONS
6	HORIZONTAL SECTIONS
7	HORIZONTAL SECTIONS
8	ANCHOR DETAILS
9	INSTALLATION NOTES & ANCHOR SCHEDULE
10	BILL OF MATERIALS & COMPONENTS
11	BILL OF MATERIALS & COMPONENTS (1)

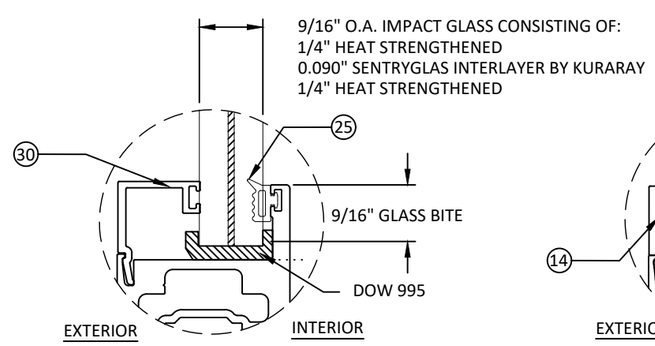

GLAZING DETAIL 1

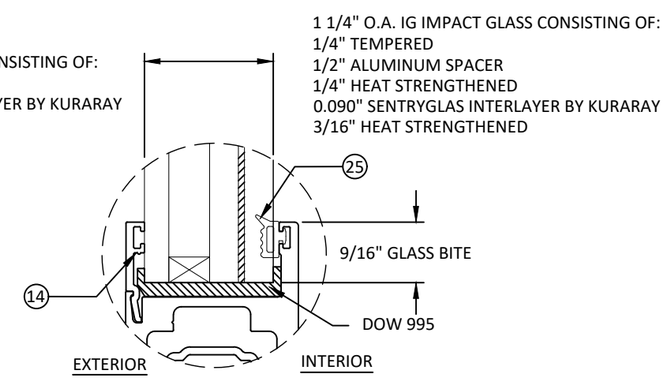

GLAZING DETAIL 2

GLAZING NOTES:

1. GLASS TYPE COMPLIES WITH ASTM E1300 REQUIREMENTS.
2. SETTING BLOCKS TO BE LOCATED AT 1/4 SPAN LENGTH FOR GLASS WIDER THAN 36" AS PER FBC CHAPTER 24.
3. SETTING BLOCK DUROMETER HARDNESS OF 70-90 (SHORE A) AS REFERENCED IN FBC CHAPTER 24.
4. GLASS TYPE SHALL COMPLY WITH APPLICABLE GLAZING REQUIREMENTS PER CHAPTER 24 OF THE FBC

euro-wall
SUPERIOR BY DESIGN

EURO-WALL, LLC
P.O. BOX 8007
NORTH PORT, FL 34290
PH: 888-989-3876

TITLE: MS MULTI-SLIDE SYSTEM (WZ3) (IMPACT)

GENERAL NOTES & GLAZING DETAILS

PREPARED BY:
BUILDING DROPS, INC.
398 E. DANIA BEACH BLVD., STE. 338
DANIA BEACH, FL 33004
PH: (954)399-8478
FAX: (954)744.4738
WEB: www.buildingdrops.com
BUILDING DROPS

REMARKS	BY	DATE
INSIDE CORNER UPDT.	LL	01/22
ADD-ON TRACK UPDT	LL	05/22
CORNER UNIT UPDATE	LL	08/22
MISC. UPDATE	OL	06/23

THE INSTALLATION DETAILS DESCRIBED HEREIN ARE GENERIC AND MAY NOT REFLECT ACTUAL CONDITIONS FOR A SPECIFIC SITE. IF SITE CONDITIONS CAUSE INSTALLATION TO DEVIATE FROM THE REQUIREMENTS DETAILED HEREIN, A LICENSED ENGINEER OR ARCHITECT SHALL PREPARE SITE SPECIFIC DOCUMENTS FOR USE WITH THIS DOCUMENT.

Digitally signed by Hermes F. Norero, P.E.
Reason: I am approving this document
Date: 2023.10.19 18:27:01 -04'00'

HERMES F. NORERO
LICENSE
No. 73778
STATE OF
FLORIDA
PROFESSIONAL ENGINEER

HERMES F. NORERO, P.E.
FLORIDA LICENSE 73778
BUILDING DROPS, INC.
398 E. DANIA BEACH BLVD. # 338
DANIA BEACH, FL 33004
FBPE CERT. OF AUTHORIZATION No. 29578

FL #: FL34003

DATE: 11.19.20

DWG. BY: YC | CHK. BY: HFN

SCALE: NTS

DWG. #: EWS017

SHEET: 1 OF 11

10/19/2023 1:06 PM
z:\projects\euro-wall systems\fbc-23-0818 - fbc submittal - ew holdings of florida llc name change\dwgs\fl34003\ews017.dwg

*NOTE:
- SEE SHEET 4 FOR QUALIFIED CONFIGURATIONS.
- FRAME WIDTH = NUMBER OF PANELS X PANELS WIDTH
- MAX. D.L.O. WIDTH = PANEL WIDTH - 1.900"
- MAX. D.L.O. HEIGHT = PANEL HEIGHT - 6.100"

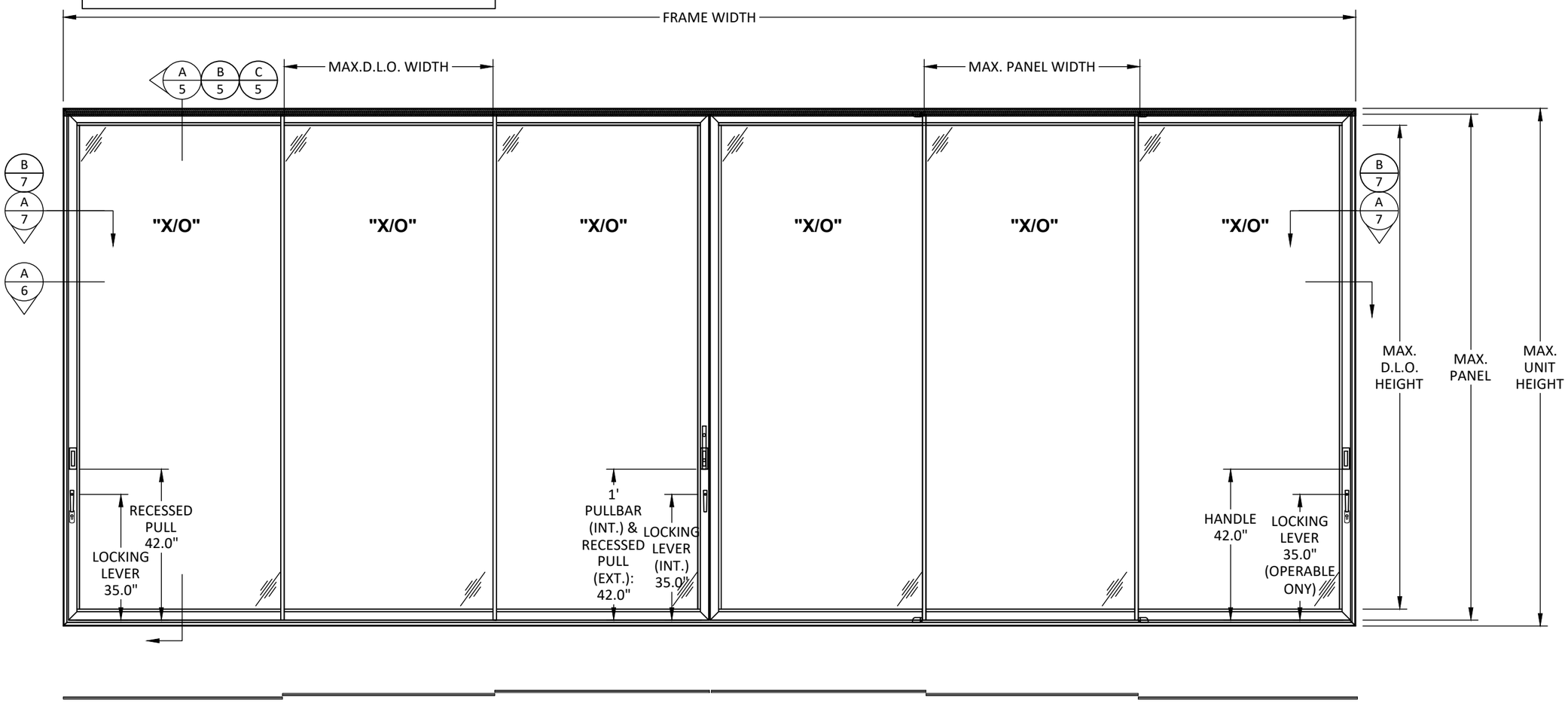

- APPROVED CONFIGURATIONS:
  2 PANEL - OX, XO, XX
  3 PANEL - OOX, XOO, XOX, OXO, XXO, OXX, XXX
  4 PANEL - OXXO, OXXX, XXXO, XXOO, XOOX, OOXX, XXXX
  5 PANEL - XXOOO, OOOXX, XXXXX, OXXXX, XXXXO
  6 PANEL - OXXXXO, OXXXXP, XXXXXX, XXXOOO, OOOXXX, OOXXOOO, XOOOOX, XXXXXO, OXXXXX,XXXXXX
  7 PANEL - XXXXXXX, OXXXXXX, XXXXXXO, OXXXXXO
  8 PANEL - OXXXXXXO, OXXXXXXX, XXXXXXXO, XXXXXXXX
- POCKETS ARE QUALIFIED ON ANY CONFIGURATION.
- POCKETS ARE QUALIFIED FOR INSTALLATION ON EITHER SIDE OF THE SYSTEM. POCKETS ARE QUALIFIED TO BE USED ON BOTH SIDE AT THE SAME TIME.

TYPICAL ELEVATION

SLIDING GLASS DOOR

NOTE:

1) MAXIMUM OF 4 PANEL CONNECTED TO CORNER UNIT ON EACH SIDE.

QUALIFIED 90 DEGREE CORNER UNIT

*SEE SHEET 4 FOR QUALIFIED CORNER UNIT SIZE AND RESPECTIVE DESIGN PRESSURES.

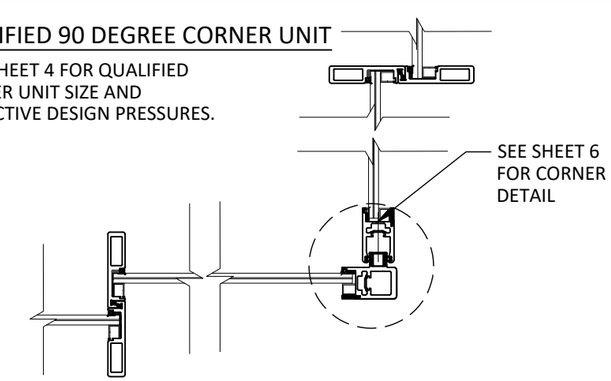

euro-wall
SUPERIOR BY DESIGN

EURO-WALL, LLC
P.O. BOX 8007
NORTH PORT, FL 34290
PH: 888-989-3876

TITLE: MS MULTI-SLIDE SYSTEM (WZ3) (IMPACT)
ELEVATION

PREPARED BY:
BUILDING DROPS, INC.
398 E. DANIA BEACH BLVD., STE. 338
DANIA BEACH, FL 33004
PH: (954)399-8478
FAX: (954)744.4738
WEB: www.buildingdrops.com

REMARKS	BY	DATE
INSIDE CORNER UPDT.	LL	01/22
ADD-ON TRACK UPDT	LL	05/22
CORNER UNIT UPDATE	LL	08/22
MISC. UPDATE	OL	06/23

THE INSTALLATION DETAILS DESCRIBED HEREIN ARE GENERIC AND MAY NOT REFLECT ACTUAL CONDITIONS FOR A SPECIFIC SITE. IF SITE CONDITIONS CAUSE INSTALLATION TO DEVIATE FROM THE REQUIREMENTS DETAILED HEREIN, A LICENSED ENGINEER OR ARCHITECT SHALL PREPARE SITE SPECIFIC DOCUMENTS FOR USE WITH THIS DOCUMENT.

HERMES F. NORERO LICENSE No. 73778 STATE OF FLORIDA PROFESSIONAL ENGINEER

HERMES F. NORERO, P.E.
FLORIDA PE No.73778
BUILDING DROPS, INC.
398 E. DANIA BEACH BLVD. # 338
DANIA BEACH, FL 33004
FBPE CERT. OF AUTHORIZATION No. 29578

FL #: FL34003

DATE: 11.19.20

DWG. BY: YC | CHK. BY: HFN

SCALE: NTS

DWG. #: EWS017

SHEET: 2 OF 11

10/19/2023 1:06 PM
z:\projects\euro-wall systems\foc-23-0818 - fbc submittal - fbc submittal - ew holdings of florida llc name change\dwgs\fl34003\ews017.dwg

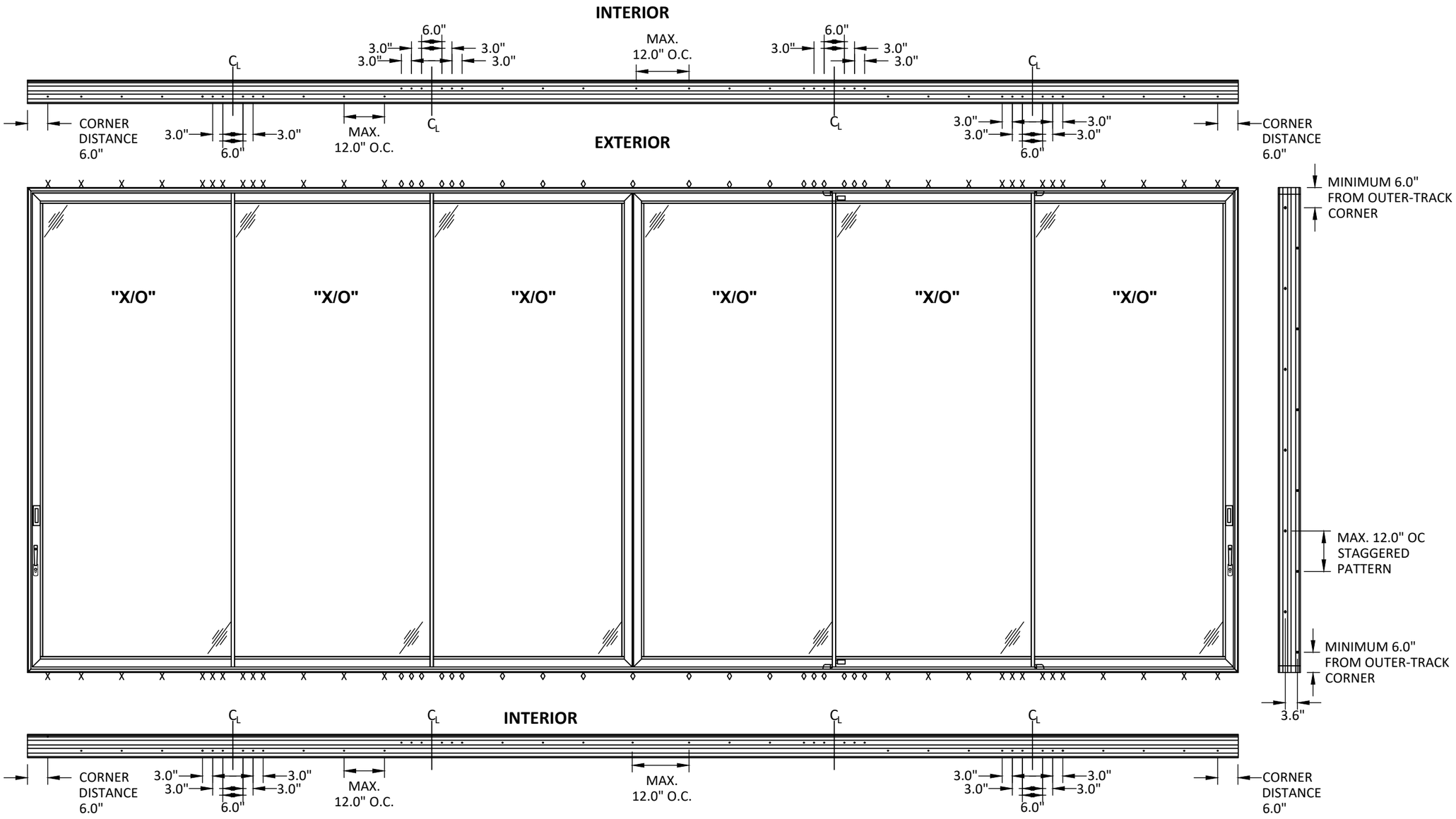

X =ANCHORS LOCATED ON THE EXTERIOR TRACK
◊ =ANCHORS LOCATED ON THE INTERIOR TRACK

ANCHOR LAYOUT

SLIDING GLASS DOOR

POCKET INSTALLATION NOTES:
1) ANCHORS FROM WALL BRACKET AND FROM HOOK STRIP TO BRACKET SHALL BE PLACED AT 4" FROM THE CORNERS AND 12" MAX. O.C.
2) WHEN POCKET IS USED, JAMB INSTALLATION ANCHORS SHALL BE INSTALLED AT 6" FROM THE CORNERS AND 36" MAX. O.C.

ANCHOR PATTERN FOR 2 TRACKS
(HEAD/SILL AND JAMBS)

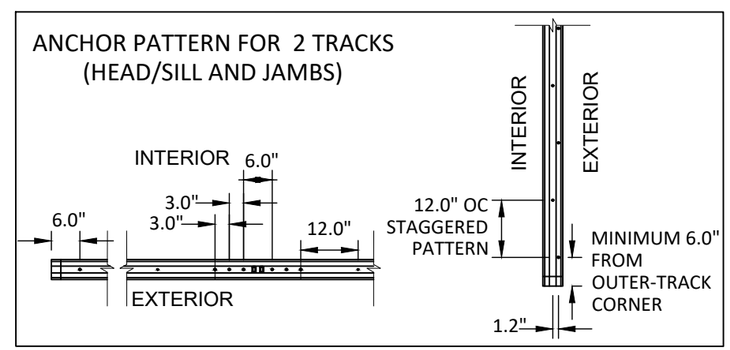

euro-wall
SUPERIOR BY DESIGN

EURO-WALL, LLC
P.O. BOX 8007
NORTH PORT, FL 34290
PH: 888-989-3876

TITLE: MS MULTI-SLIDE SYSTEM (WZ3) (IMPACT)

ANCHOR LAYOUT

PREPARED BY:
BUILDING DROPS, INC.
398 E. DANIA BEACH BLVD., STE. 338
DANIA BEACH, FL 33004
PH: (954)399-8478
FAX: (954)744.4738
WEB: www.buildingdrops.com
BUILDING DROPS

REMARKS	BY	DATE
INSIDE CORNER UPDT.	LL	01/22
ADD-ON TRACK UPDT	LL	05/22
CORNER UNIT UPDATE	LL	08/22
MISC. UPDATE	OL	06/23

THE INSTALLATION DETAILS DESCRIBED HEREIN ARE GENERIC AND MAY NOT REFLECT ACTUAL CONDITIONS FOR A SPECIFIC SITE. IF SITE CONDITIONS CAUSE INSTALLATION TO DEVIATE FROM THE REQUIREMENTS DETAILED HEREIN, A LICENSED ENGINEER OR ARCHITECT SHALL PREPARE SITE SPECIFIC DOCUMENTS FOR USE WITH THIS DOCUMENT.

HERMES F. NORERO, P.E.
FLORIDA PE No. 73778
BUILDING DROPS, INC.
398 E. DANIA BEACH BLVD. # 338
DANIA BEACH, FL 33004
FBPE CERT. OF AUTHORIZATION No. 29578

FL #: FL34003

DATE: 11.19.20

DWG. BY: YC

CHK. BY: HFN

SCALE: NTS

DWG. #: EWS017

SHEET: 3 OF 11

10/19/2023 1:06 PM
z:\projects\euro-wall systems\fbc-23-0818 - fbc submittal - fbc submittal - ew holdings of florida llc name change\dwgs\fl34003\ews017.dwg

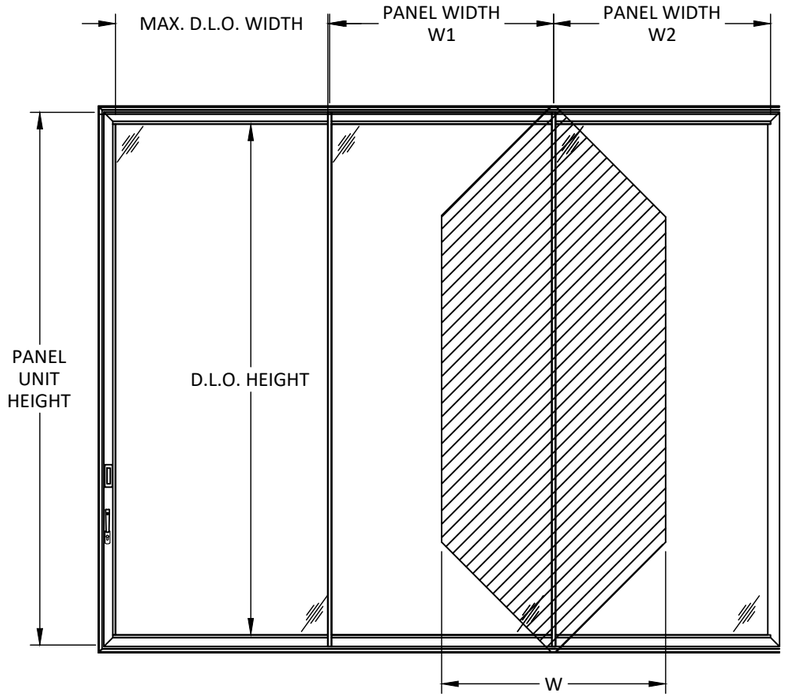

TRIBUTARY WIDTH(W) = (W1+W2)/2

- APPROVED CONFIGURATIONS:
  2 PANEL - OX, XO, XX
  3 PANEL - OOX, XOO, XOX, OXO, XXO, OXX, XXX
  4 PANEL - OXXO, OXXX, XXXO, XXOO, XOOX, OOXX, XXXX
  5 PANEL - XXOOO, OOOXX, XXXXX, OXXXX, XXXXO
  6 PANEL - OXXXXO, OXXXXP, XXXXXX, XXXOOO, OOOXXX, OOXXOOO, XOOOOX, XXXXXO, OXXXXX,XXXXXX
  7 PANEL - XXXXXXX, OXXXXXX, XXXXXXO, OXXXXXO
  8 PANEL - OXXXXXXO, OXXXXXXX, XXXXXXXO, XXXXXXXX
- POCKETS ARE QUALIFIED ON ANY CONFIGURATION.
- POCKETS ARE QUALIFIED FOR INSTALLATION ON EITHER SIDE OF THE SYSTEM. POCKETS ARE QUALIFIED TO BE USED ON BOTH SIDE AT THE SAME TIME.

NOTE
1) MAXIMUM FRAME AREA = 628 SQUARE FEET.
2) MAXIMUM OF 4 PANEL CONNECTED TO CORNER UNIT ON EACH SIDE.

DESIGN PRESSURE TABLE (+/- PSF)

PANEL HEIGHT (INCHES) \ TRIBUTARY WIDTH (INCHES)	45	48	51	54	57	60	63	66	69	72	75	78	81	84
90	120.0	120.0	120.0	120.0	120.0	120.0	120.0	120.0	120.0	120.0	120.0	120.0	120.0	119.0
96	120.0	120.0	120.0	120.0	120.0	120.0	120.0	120.0	120.0	120.0	120.0	108.0	107.0	106.0
102	120.0	120.0	120.0	120.0	120.0	120.0	120.0	120.0	120.0	101.0	99.0	98.0	97.0	95.0
108	120.0	120.0	120.0	120.0	120.0	120.0	120.0	120.0	95.0	93.0	91.0	89.0		
114	120.0	120.0	120.0	120.0	120.0	120.0	120.0	89.6	87.3	85.3	83.5			
120	120.0	120.0	120.0	120.0	120.0	120.0	85.9	83.4	81.2	79.2				
126	120.0	120.0	117.6	112.0	107.1	83.1	80.4	78.0						
132	113.7	107.3	101.7	96.8	81.2	78.2	75.6							
138	99.1	93.5	88.5	79.9	76.7	73.9								
144	87.6	83.1	79.2	75.8	72.7	70.0								
150	79.8	75.2	71.1	67.6	64.4									
156	70.7	66.6	63.0	59.8										
162	63.0	59.3	56.1											
168	56.4	53.1	50.2											

euro-wall
SUPERIOR BY DESIGN

EURO-WALL, LLC
P.O. BOX 8007
NORTH PORT, FL 34290
PH: 888-989-3876

TITLE: MS MULTI-SLIDE SYSTEM (WZ3) (IMPACT)
DESIGN PRESSURE TABLES

PREPARED BY:
BUILDING DROPS, INC.
398 E. DANIA BEACH BLVD., STE. 338
DANIA BEACH, FL 33004
PH: (954)399-8478
FAX: (954)744.4738
WEB: www.buildingdrops.com

REMARKS	BY	DATE
INSIDE CORNER UPDT.	LL	01/22
ADD-ON TRACK UPDT	LL	05/22
CORNER UNIT UPDATE	LL	08/22
MISC. UPDATE	OL	06/23

THE INSTALLATION DETAILS DESCRIBED HEREIN ARE GENERIC AND MAY NOT REFLECT ACTUAL CONDITIONS FOR A SPECIFIC SITE. IF SITE CONDITIONS CAUSE INSTALLATION TO DEVIATE FROM THE REQUIREMENTS DETAILED HEREIN, A LICENSED ENGINEER OR ARCHITECT SHALL PREPARE SITE SPECIFIC DOCUMENTS FOR USE WITH THIS DOCUMENT.

HERMES F. NORERO
LICENSE
No. 73778
STATE OF
FLORIDA
PROFESSIONAL ENGINEER

HERMES F. NORERO, P.E.
FLORIDA P.E. No. 73778
BUILDING DROPS, INC.
398 E. DANIA BEACH BLVD. # 338
DANIA BEACH, FL 33004
FBPE CERT. OF AUTHORIZATION No. 29578

FL #: FL34003
DATE: 11.19.20
DWG. BY: YC
CHK. BY: HFN
SCALE: NTS
DWG. #: EWS017
SHEET: 4 OF 11

10/19/2023 1:06 PM
z:\projects\euro-wall systems\fbc-23-0818 - fbc submittal - fbc submittal - ew holdings of florida llc name change\dwgs\fl34003\ews017.dwg

*NOTE:
9/16" LAMINATED GLASS SHOWN
1-1/4" INSULATED GLASS ALSO QUALIFIED

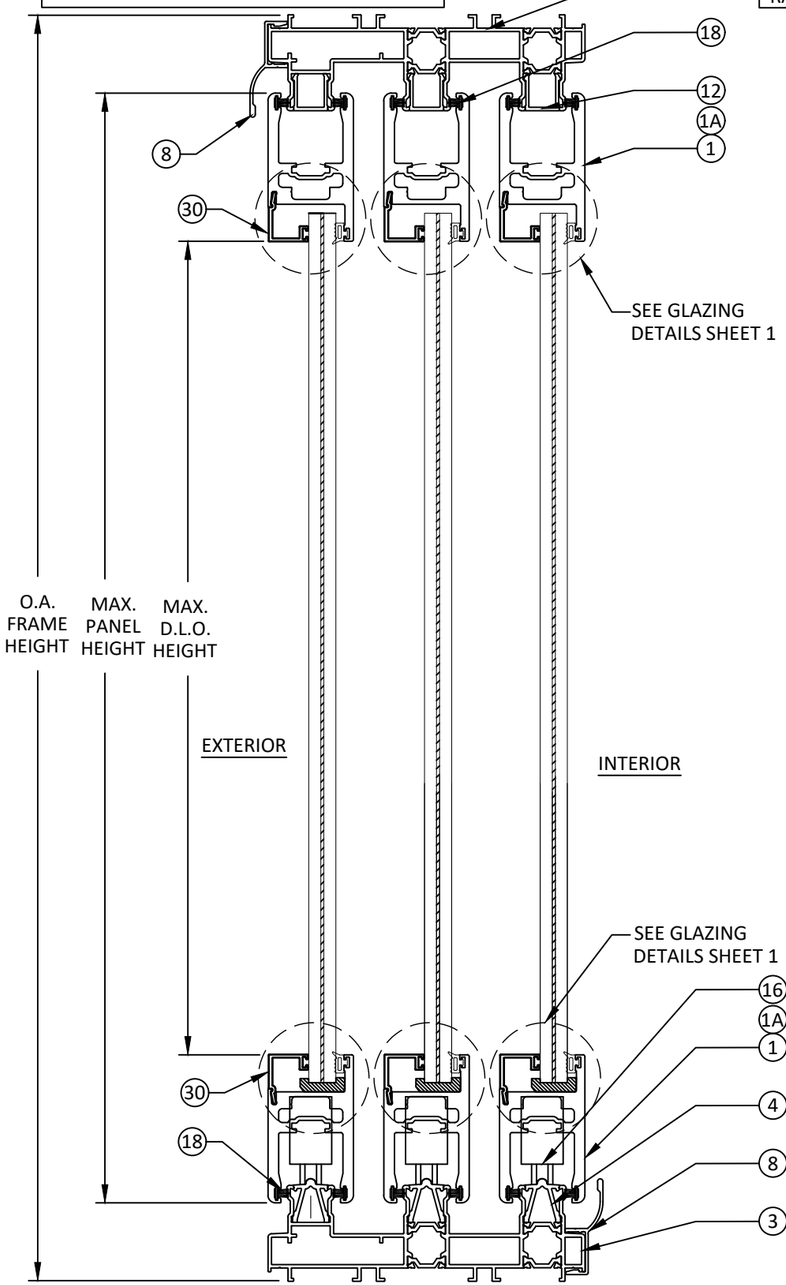

A/5 VERTICAL SECTION

SLIDING GLASS DOOR
3 TRACKS

THERMALLY BROKEN FRAME PROFILES SHOWN, NON-THERMALLY BROKEN FRAME PROFILES ARE ALSO QUALIFIED FOR THE SAME SIZES AND RATINGS, SEE BOM.

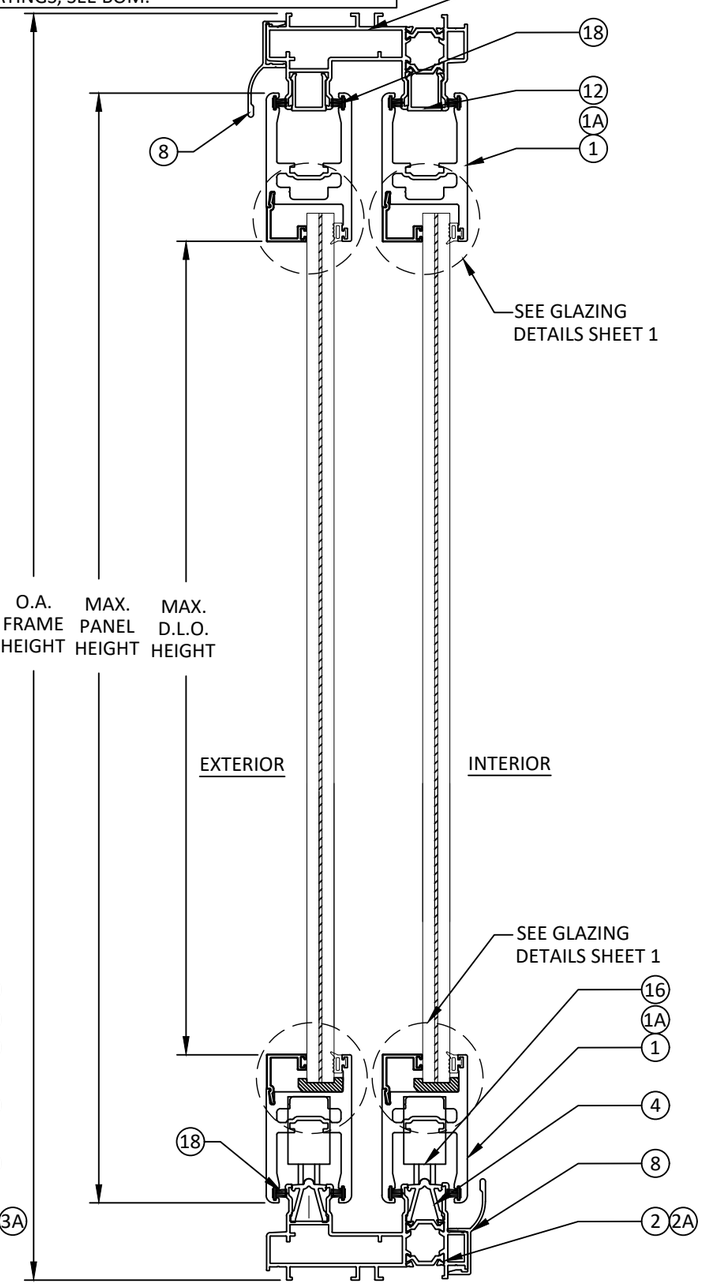

B/5 VERTICAL SECTION

SLIDING GLASS DOOR
2 TRACK

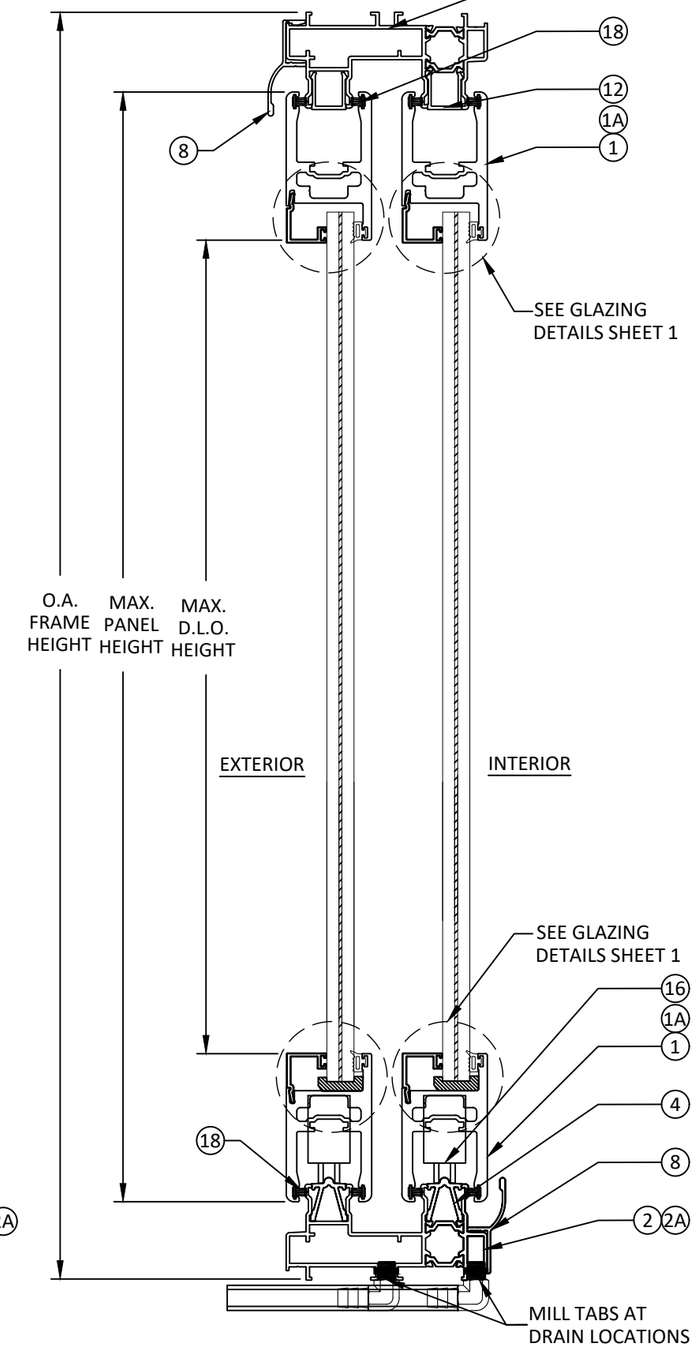

C/5 VERTICAL SECTION

SLIDING GLASS DOOR
OPTIONAL SUNKEN SILL
2 TRACKS SHOWN, 3 TRACKS QUALIFIED

euro-wall
SUPERIOR BY DESIGN

EURO-WALL, LLC
P.O. BOX 8007
NORTH PORT, FL 34290
PH: 888-989-3876

TITLE: MS MULTI-SLIDE SYSTEM (WZ3) (IMPACT)

VERTICAL SECTIONS

PREPARED BY:
BUILDING DROPS, INC.
398 E. DANIA BEACH BLVD., STE. 338
DANIA BEACH, FL 33004
PH: (954)399-8478
FAX: (954)744.4738
WEB: www.buildingdrops.com

REMARKS	BY	DATE
INSIDE CORNER UPDT.	LL	01/22
ADD-ON TRACK UPDT	LL	05/22
CORNER UNIT UPDATE	LL	08/22
MISC. UPDATE	OL	06/23

THE INSTALLATION DETAILS DESCRIBED HEREIN ARE GENERIC AND MAY NOT REFLECT ACTUAL CONDITIONS FOR A SPECIFIC SITE. IF SITE CONDITIONS CAUSE INSTALLATION TO DEVIATE FROM THE REQUIREMENTS DETAILED HEREIN, A LICENSED ENGINEER OR ARCHITECT SHALL PREPARE SITE SPECIFIC DOCUMENTS FOR USE WITH THIS DOCUMENT.

HERMES F. NORERO
LICENSE
No. 73778
STATE OF
FLORIDA
PROFESSIONAL ENGINEER

HERMES F. NORERO, P.E.
FLORIDA P.E. No. 73778
BUILDING DROPS, INC.
398 E. DANIA BEACH BLVD. # 338
DANIA BEACH, FL 33004
FBPE CERT. OF AUTHORIZATION No. 29578

FL #: FL34003

DATE: 11.19.20

DWG. BY: YC

CHK. BY: HFN

SCALE: NTS

DWG. #: EWS017

SHEET: 5 OF 11

10/19/2023 1:06 PM
z:\projects\euro-wall systems\fbc-23-0818 - fbc submittal - ew holdings of florida llc name change\dwgs\fl34003\ews017.dwg

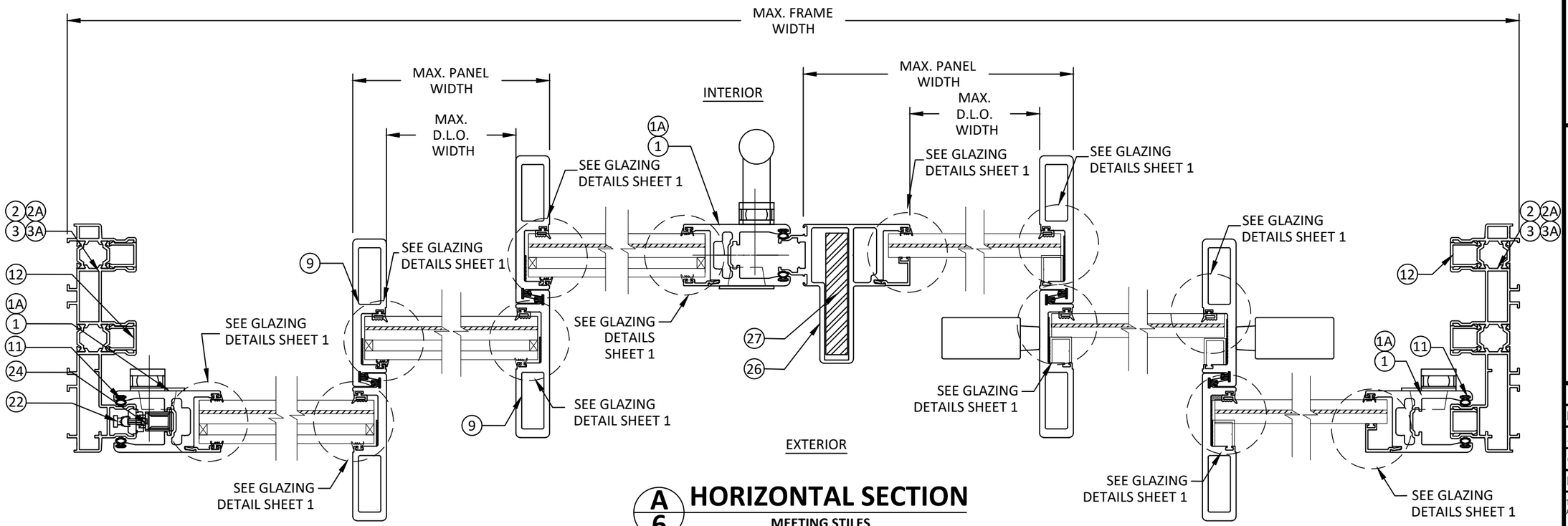

A/6 HORIZONTAL SECTION

MEETING STILES
2 OR 3 TRACKS

THERMALLY BROKEN FRAME PROFILES SHOWN, NON-THERMALLY BROKEN FRAME PROFILES ARE ALSO QUALIFIED FOR THE SAME SIZES AND RATINGS, SEE BOM.

*NOTE:
9/16" LAMINATED GLASS SHOWN
1 1/4" INSULATED GLASS ALSO QUALIFIED

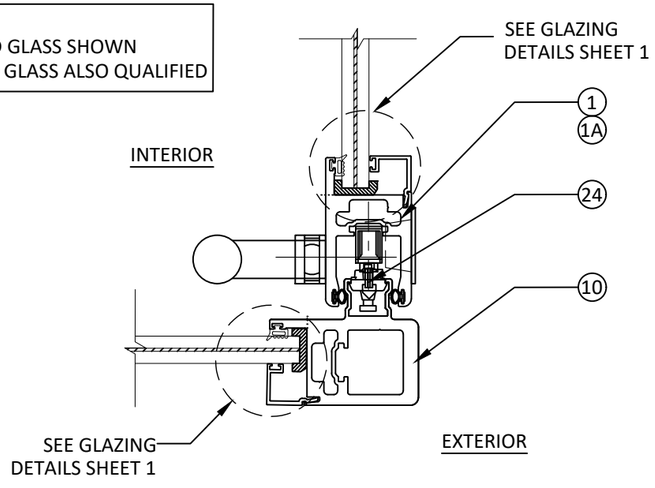

B/6 HORIZONTAL SECTION

OUTSIDE CORNER DETAIL

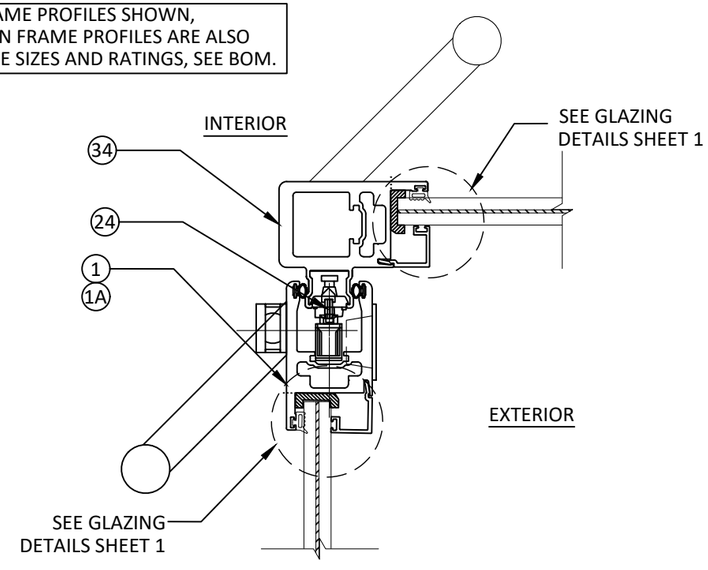

C/6 HORIZONTAL SECTION

INSIDE CORNER DETAIL

euro-wall
SUPERIOR BY DESIGN

EURO-WALL, LLC
P.O. BOX 8007
NORTH PORT, FL 34290
PH: 888-989-3876

TITLE: MS MULTI-SLIDE SYSTEM (WZ3) (IMPACT)
HORIZONTAL SECTIONS

PREPARED BY:
BUILDING DROPS, INC.
398 E. DANIA BEACH BLVD., STE. 338
DANIA BEACH, FL 33004
PH: (954)399-8478
FAX: (954)744.4738
WEB: www.buildingdrops.com
BUILDING DROPS

REMARKS	BY	DATE
INSIDE CORNER UPDT.	LL	01/22
ADD-ON TRACK UPDT	LL	05/22
CORNER UNIT UPDATE	LL	08/22
MISC. UPDATE	OL	06/23

THE INSTALLATION DETAILS DESCRIBED HEREIN ARE GENERIC AND MAY NOT REFLECT ACTUAL CONDITIONS FOR A SPECIFIC SITE. IF SITE CONDITIONS CAUSE INSTALLATION TO DEVIATE FROM THE REQUIREMENTS DETAILED HEREIN, A LICENSED ENGINEER OR ARCHITECT SHALL PREPARE SITE SPECIFIC DOCUMENTS FOR USE WITH THIS DOCUMENT.

HERMES F. NORERO
LICENSE
No. 73778
STATE OF
FLORIDA
PROFESSIONAL ENGINEER

HERMES F. NORERO, P.E.
FLORIDA P.E. No 73778
BUILDING DROPS, INC.
398 E. DANIA BEACH BLVD. # 338
DANIA BEACH, FL 33004
FBPE CERT. OF AUTHORIZATION No. 29578

FL #: FL34003

DATE: 11.19.20

DWG. BY: YC | CHK. BY: HFN

SCALE: NTS

DWG. #: EWS017

SHEET: 6 OF 11

10/19/2023 1:06 PM
z:\projects\euro-wall systems\fbc-23-0818 - fbc submittal - ew holdings of florida llc name change\dwgs\fl34003\ews017.dwg

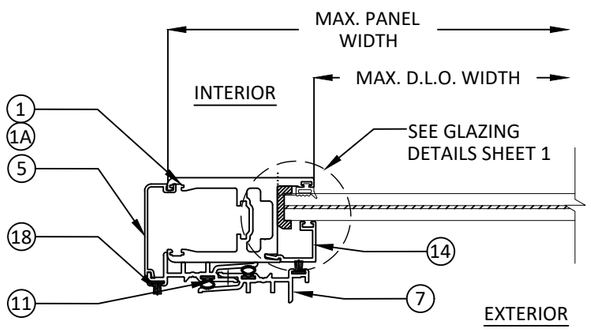

A/7 HORIZONTAL SECTION

INSIDE POCKET WALL

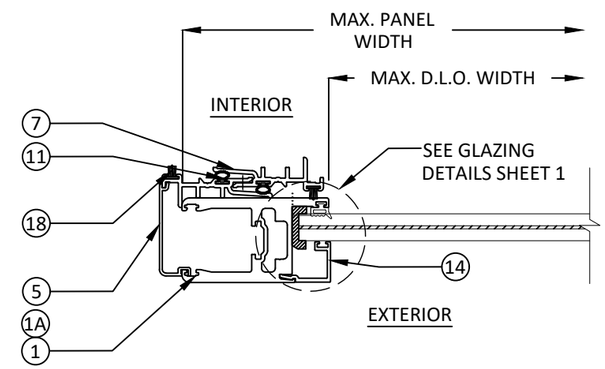

B/7 HORIZONTAL SECTION

OUTSIDE POCKET WALL

euro-wall
SUPERIOR BY DESIGN

EURO-WALL, LLC
P.O. BOX 8007
NORTH PORT, FL 34290
PH: 888-989-3876

TITLE: MS MULTI-SLIDE SYSTEM (WZ3) (IMPACT)

HORIZONTAL SECTIONS

PREPARED BY:
BUILDING DROPS, INC.
398 E. DANIA BEACH BLVD., STE. 338
DANIA BEACH, FL 33004
PH: (954)399-8478
FAX: (954)744.4738
WEB: www.buildingdrops.com

REMARKS	BY	DATE
INSIDE CORNER UPDT.	LL	01/22
ADD-ON TRACK UPDT	LL	05/22
CORNER UNIT UPDATE	LL	08/22
MISC. UPDATE	OL	06/23

THE INSTALLATION DETAILS DESCRIBED HEREIN ARE GENERIC AND MAY NOT REFLECT ACTUAL CONDITIONS FOR A SPECIFIC SITE. IF SITE CONDITIONS CAUSE INSTALLATION TO DEVIATE FROM THE REQUIREMENTS DETAILED HEREIN, A LICENSED ENGINEER OR ARCHITECT SHALL PREPARE SITE SPECIFIC DOCUMENTS FOR USE WITH THIS DOCUMENT.

HERMES F. NORERO
LICENSE
No. 73778
STATE OF
FLORIDA
PROFESSIONAL ENGINEER

HERMES F. NORERO, P.E.
FLORIDA P.E. No. 73778
BUILDING DROPS, INC.
398 E. DANIA BEACH BLVD. # 338
DANIA BEACH, FL 33004
FBPE CERT. OF AUTHORIZATION No. 29578

FL #: FL34003

DATE: 11.19.20

DWG. BY: YC

CHK. BY: HFN

SCALE: NTS

DWG. #: EWS017

SHEET: 7 OF 11

10/19/2023 1:06 PM
z:\projects\euro-wall systems\fbc-23-0818 - fbc submittal - ew holdings of florida llc name change\dwgs\fl34003\ews017.dwg

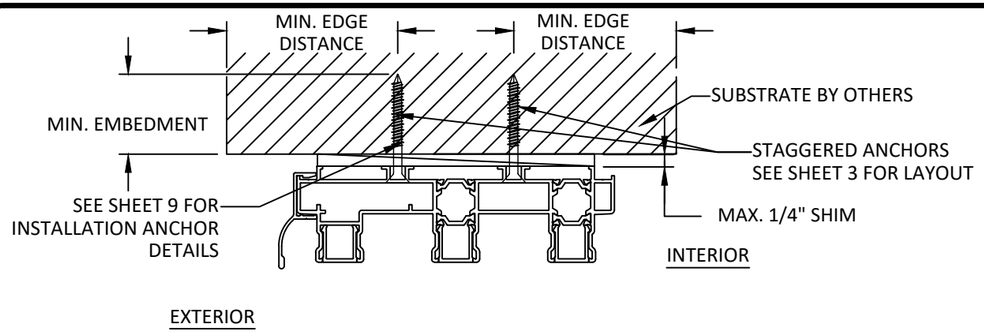

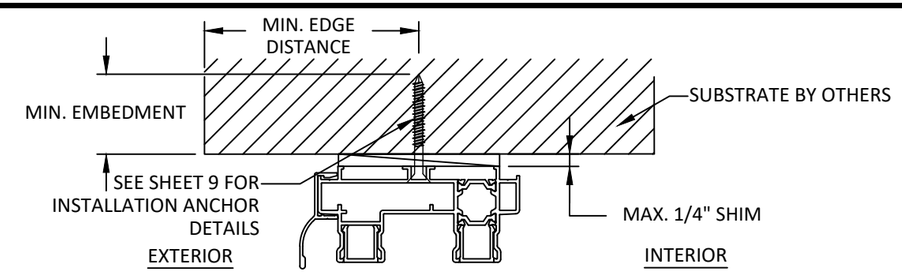

A/8 ANCHOR DETAIL

THROUGH FRAME INSTALLATION (HEAD)
3 TRACKS

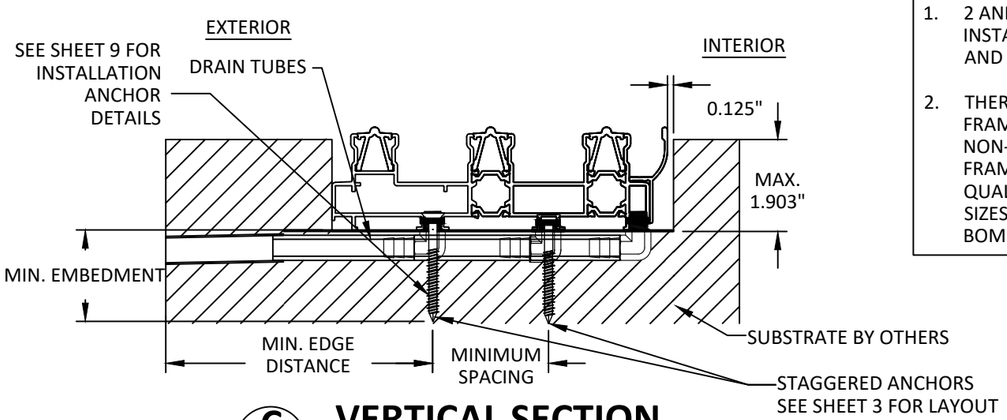

C/8 VERTICAL SECTION

THROUGH FRAME INSTALLATION (SILL)
OPTIONAL SUNKEN 3-TRACK INSTALLATION

NOTE:

1. 2 AND 3 TRACK FRAME INSTALLATION SHOWN, 4 AND 5 TRACK INST. SIMILAR
2. THERMALLY BROKEN FRAME PROFILES SHOWN, NON-THERMALLY BROKEN FRAME PROFILES ARE ALSO QUALIFIED FOR THE SAME SIZES AND RATINGS, SEE BOM.

B/8 ANCHOR DETAIL

THROUGH FRAME INSTALLATION (HEAD)
2 TRACKS

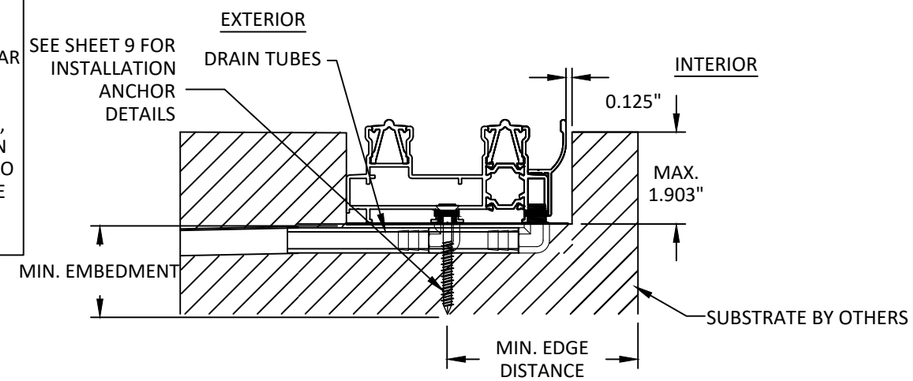

D/8 ANCHOR DETAIL

THROUGH FRAME INSTALLATION (SILL)
OPTIONAL SUNKEN 2-TRACK INSTALLATION

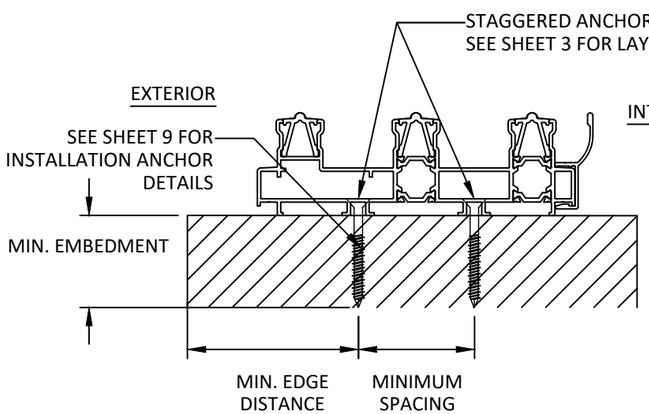

E/8 ANCHOR DETAIL

TRHOUGH FRAME INSTALLATION (SILL)
3 TRACKS

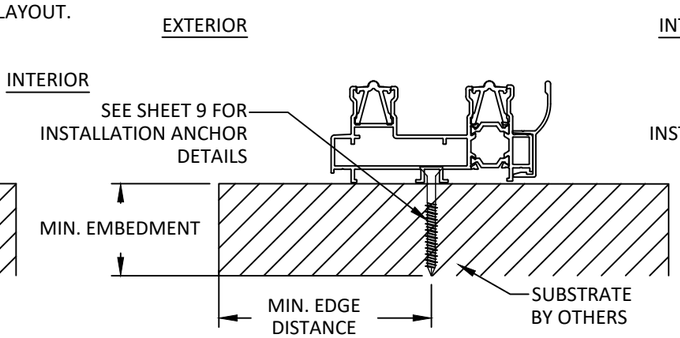

F/8 ANCHOR DETAIL

THROUGH FRAME INSTALLATION (SILL)
2 TRACKS

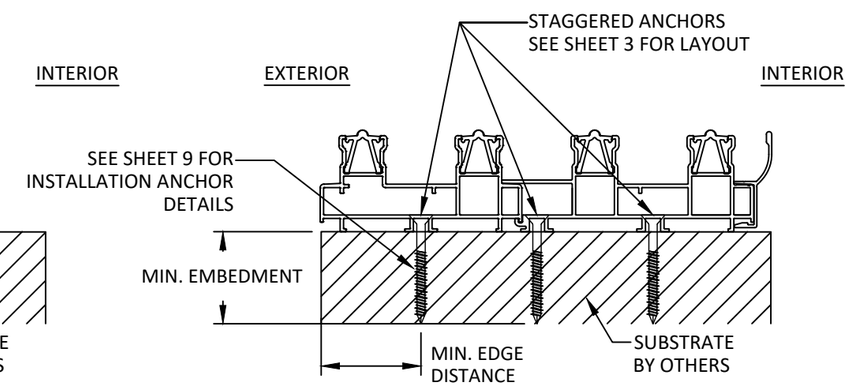

G/8 ANCHOR DETAIL

THROUGH FRAME INSTALLATION (SILL)
3 TRACKS WITH EXTENSION

euro-wall
SUPERIOR BY DESIGN

EURO-WALL, LLC
P.O. BOX 8007
NORTH PORT, FL 34290
PH: 888-989-3876

TITLE: MS MULTI-SLIDE SYSTEM (WZ3) (IMPACT)
ANCHOR DETAILS

PREPARED BY:
BUILDING DROPS, INC.
398 E. DANIA BEACH BLVD., STE. 338
DANIA BEACH, FL 33004
PH: (954)399-8478
FAX: (954)744.4738
WEB: www.buildingdrops.com

REMARKS	BY	DATE
INSIDE CORNER UPDT.	LL	01/22
ADD-ON TRACK UPDT	LL	05/22
CORNER UNIT UPDATE	LL	08/22
MISC. UPDATE	OL	06/23

THE INSTALLATION DETAILS DESCRIBED HEREIN ARE GENERIC AND MAY NOT REFLECT ACTUAL CONDITIONS FOR A SPECIFIC SITE. IF SITE CONDITIONS CAUSE INSTALLATION TO DEVIATE FROM THE REQUIREMENTS DETAILED HEREIN, A LICENSED ENGINEER OR ARCHITECT SHALL PREPARE SITE SPECIFIC DOCUMENTS FOR USE WITH THIS DOCUMENT.

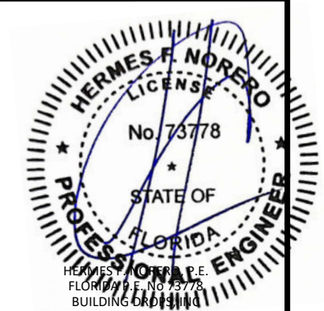

HERMES F. NORERO, P.E.
FLORIDA P.E. No 73778
BUILDING DROPS, INC.
398 E. DANIA BEACH BLVD. # 338
DANIA BEACH, FL 33004
FBPE CERT. OF AUTHORIZATION No. 29578

FL #: FL34003

DATE: 11.19.20

DWG. BY: YC | CHK. BY: HFN

SCALE: NTS

DWG. #: EWS017

SHEET: 8 OF 11

10/19/2023 1:06 PM
z:\projects\euro-wall systems\fbc-23-0818 - fbc submittal - ew holdings of florida llc name change\dwgs\fl34003\ews017.dwg

10/19/2023 1:06 PM
z:\projects\euro-wall systems\fbc-23-0818 - fbc submittal - ew holdings of florida llc name change\dwgs\fl34003\ews017.dwg

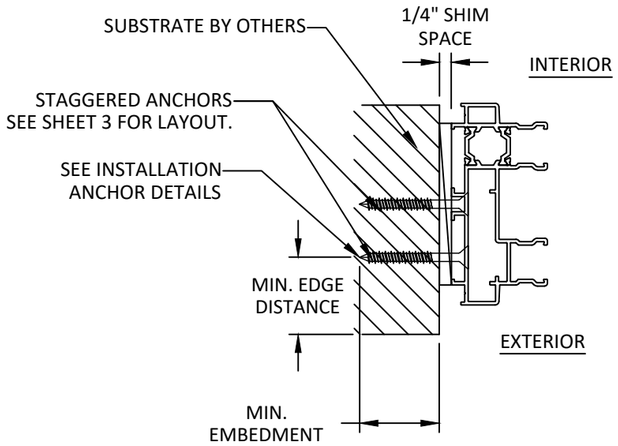

A/9 ANCHOR DETAIL

THROUGH FRAME (JAMB)
2 TRACK

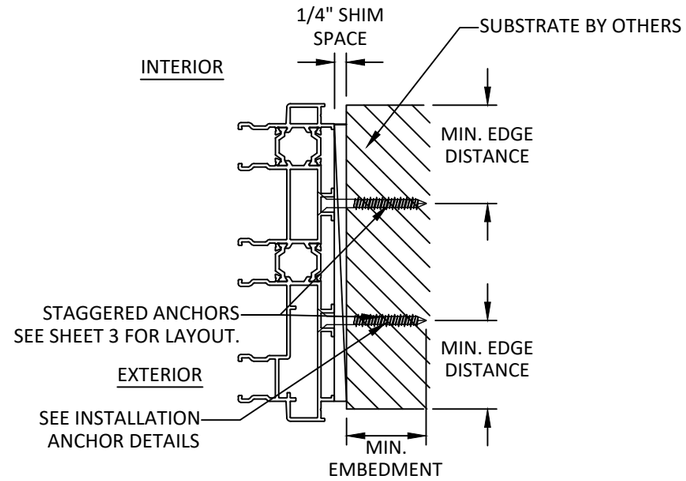

B/9 ANCHOR DETAIL

THROUGH FRAME (JAMB)
3 TRACK

ANCHOR FOR WALL BRACKET AND FROM HOOK STRIP TO BRACKET TO BE LOCATED AT A MAXIMUM OF 4" FROM THE CORNER AND MAXIMUM OF 12" O.C. SPACING

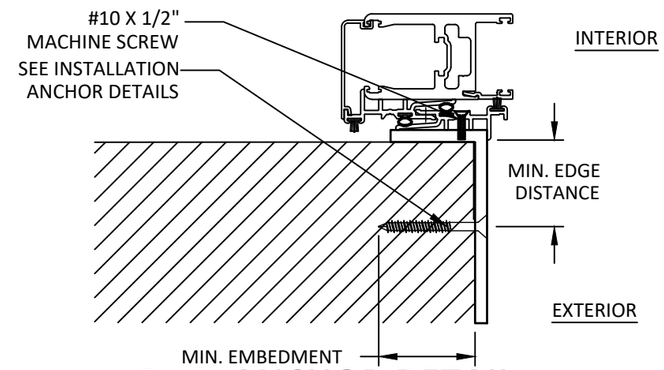

C/9 ANCHOR DETAIL

INSIDE POCKET BRACKET INSTALLATION

THERMALLY BROKEN FRAME PROFILES SHOWN, NON-THERMALLY BROKEN FRAME PROFILES ARE ALSO QUALIFIED FOR THE SAME SIZES AND RATINGS, SEE BOM.

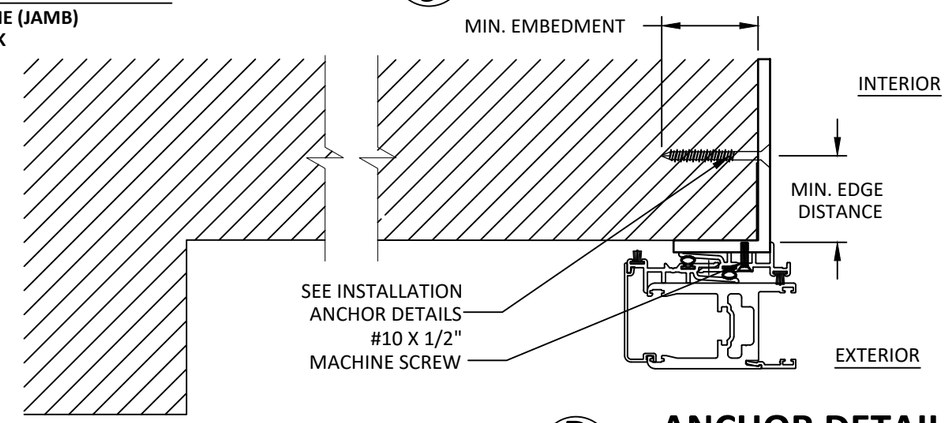

NOTE: OUTSIDE POCKET CONDITION SHALL BE OPEN TO THE EXTERIOR. OUTSIDE POCKET SHALL NOT BE ENCLOSED. POCKET CONSTRUCTION DETAILS BY OTHERS.

D/9 ANCHOR DETAIL

OUTSIDE POCKET BRACKET INSTALLATION

INSTALLATION NOTES:

1. ONE (1) INSTALLATION ANCHOR IS REQUIRED AT EACH ANCHOR LOCATION SHOWN UNLESS SPECIFIED IN THE ANCHOR SCHEDULE. TWO (2) INSTALLATION ANCHORS AT THE JAMBS.
2. THE NUMBER OF INSTALLATION ANCHORS DEPICTED IS THE MINIMUM NUMBER OF ANCHORS TO BE USED FOR PRODUCT INSTALLATION OF THE MAXIMUM SIZE LISTED.
3. INSTALL INDIVIDUAL INSTALLATION ANCHORS WITHIN A TOLERANCE OF ±1/2 INCH THE DEPICTED LOCATION & SPACING IN THE ANCHOR LAYOUT DETAILS (I.E., WITHOUT CONSIDERATION OF TOLERANCES). TOLERANCES ARE NOT CUMULATIVE FROM ONE INSTALLATION ANCHOR TO THE NEXT.
4. SHIM AS REQUIRED AT EACH INSTALLATION ANCHOR WITH LOAD BEARING SHIM(S). MAXIMUM ALLOWABLE SHIM STACK TO BE 1/4 INCH. SHIM WHERE SPACE OF 1/16 INCH OR GREATER OCCURS. SHIM(S) SHALL BE CONSTRUCTED OF HIGH DENSITY PLASTIC OR BETTER.
5. FOR MASONRY OR CONCRETE OPENINGS, 1X WOOD BUCK MAY BE USED (OPTIONAL AS LONG AS THE MINIMUM EMBEDMENT AND EDGE DISTANCE REQUIREMENTS ARE STILL MET WITHIN THE CORRESPONDING HOST SUBSTRATE.) SEE GENERAL NOTE #3 ON SHEET 1 FOR MORE INFORMATION.
6. MINIMUM EMBEDMENT AND EDGE DISTANCE EXCLUDE WALL FINISHES, INCLUDING BUT NOT LIMITED TO STUCCO, FOAM, BRICK VENEER, AND SIDING.
7. INSTALLATION ANCHORS AND ASSOCIATED HARDWARE MUST BE MADE OF CORROSION RESISTANT MATERIAL OR HAVE A CORROSION RESISTANT COATING.
8. FOR HOLLOW BLOCK AND GROUT FILLED BLOCK, DO NOT INSTALL INSTALLATION ANCHORS INTO MORTAR JOINTS. EDGE DISTANCE IS MEASURED FROM FREE EDGE OF BLOCK OR EDGE OF MORTAR JOINT INTO FACE SHELL OF BLOCK.
9. INSTALLATION ANCHORS SHALL BE INSTALLED IN ACCORDANCE WITH ANCHOR MANUFACTURER'S INSTALLATION INSTRUCTIONS, AND ANCHORS SHALL NOT BE USED IN SUBSTRATES WITH STRENGTHS LESS THAN THE MINIMUM STRENGTH SPECIFIED BY THE ANCHOR MANUFACTURER.

ANCHOR SCHEDULE

METHOD	SUBSTRATE	ANCHOR SCHEDULE	MIN EMBEDMENT	MIN. EDGE DISTANCE	MIN. SPACING
THROUGH FRAME	WOOD: MIN. SG = 0.55	#14 WOOD SCREW	1.5"	0.75"	2.50"
	METAL: 18 GAUGE STEEL, MIN. Fy = 33KSI	#12 SELF DRILLING OR SELF TAPPING SCREW	3 THREADS MIN PENETRATION BEYOND METAL	0.50"	
	METAL: 1/8" MIN. THICKNESS ALUMINUM MIN. 6063-T5				
	CONCRETE: f'c=3000PSI	1/4" ITW TAPCON	1.25"	2.00"	
	MASONRY: CMU per ASTM C90	1/4" ITW TAPCON	1.25"	2.00"	

euro-wall
SUPERIOR BY DESIGN

EURO-WALL, LLC
P.O. BOX 8007
NORTH PORT, FL 34290
PH: 888-989-3876

TITLE: MS MULTI-SLIDE SYSTEM (WZ3) (IMPACT)
INSTALLATION NOTES & ANCHOR SCHEDULE

PREPARED BY: BUILDING DROPS, INC.
398 E. DANIA BEACH BLVD., STE. 338
DANIA BEACH, FL 33004
PH: (954)399-8478
FAX: (954)744.4738
WEB: www.buildingdrops.com
BUILDING DROPS

REMARKS	BY	DATE
INSIDE CORNER UPDT.	LL	01/22
ADD-ON TRACK UPDT	LL	05/22
CORNER UNIT UPDATE	LL	08/22
MISC. UPDATE	OL	06/23

THE INSTALLATION DETAILS DESCRIBED HEREIN ARE GENERIC AND MAY NOT REFLECT ACTUAL CONDITIONS FOR A SPECIFIC SITE. IF SITE CONDITIONS CAUSE INSTALLATION TO DEVIATE FROM THE REQUIREMENTS DETAILED HEREIN, A LICENSED ENGINEER OR ARCHITECT SHALL PREPARE SITE SPECIFIC DOCUMENTS FOR USE WITH THIS DOCUMENT.

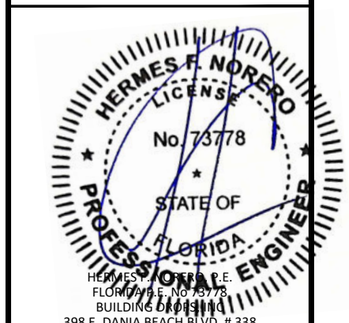

HERMES F. NORERO P.E.
FLORIDA P.E. No. 73778
BUILDING DROPS INC.
398 E. DANIA BEACH BLVD. # 338
DANIA BEACH, FL 33004
FBPE CERT. OF AUTHORIZATION No. 29578

FL #: FL34003

DATE: 11.19.20

DWG. BY: YC | CHK. BY: HFN

SCALE: NTS

DWG. #: EWS017

SHEET: 9 OF 11

BILL OF MATERIALS

NO	PART #	DESCRIPTION	MATERIAL
1	MS-SASH	SASH RAIL/STILE	6061-T5
1A	MS-SASH	OPTIONAL SASH RAIL/STILE	6061-T5
2	E0117-A	2 TRACK JAMB/HEAD/SILL (THERMAL)	6063-T5/POLYAMIDE
3	E0118-A	3 TRACK JAMB/HEAD/SILL (THERMAL)	6063-T5/POLYAMIDE
2A	E0117-B	2 TRACK JAMB/HEAD/SILL (NON THERMAL)	6063-T5
3A	E0118-B	3 TRACK JAMB/HEAD/SILL (NON THERMAL)	6063-T5
4	MS-SB	SNAP TRACK	6063-T5
5	MS-SC	SASH END CAP	6063-T5
6	MS-DC	DRAIN COVER	POLYMIDE
7	MS-ILP	POCKET INTERLOCK	6063-T5
8	MS-CON	CONDENSATION ACC	6063-T5
9	MS-SI	SASH/STILE INTERLOCK	6063-T5
10	CD-ASTRAGAL	OUTSIDE CORNER DOOR ASTRAGAL SASH/STILE	6063-T5
11	MS-RWS	ROUND WEATHERSTRIP	POLYMER
12	MS-JHT	JAMB/ HEADER TRIM	6063-T5
13	MS-AST	ASTRAGAL	6063-T5
14	MS-GB	GLAZING BEAD	6063-T5
15	MS-RL1	ROLLER 1	KEVLAR/SS/STEEL
16	MS-RL2	ROLLER 2	KEVLAR/SS/STEEL
17	MS-GG	GLAZING GASKET	EPDM
18	MS-TWS	T-SLOT SWEEP	POLYMER
21	MS-REDUCER	REDUCER BAR	6063-T5
22	MS-PAWL-CAT	SMALL PAWL CATCHAR	S/S STEEL
23	MS-LOCK	LOCKING LEVER (DEBAR)	STEEL
24	MS-PAWL	PAWL	S/S STEEL
25	CD AST BAR	9/16" GLAZING GASKET	EPDM
26	E0094-E	MS 1 PIECE ASTRAGAL	6063-T5
27	E0097-A	STEEL BAR .625"x 3.5"	STEEL
28	-	ASTRAGAL REINFORCEMENT	STEEL
29	-	LARGE PAWL CATCHER	STEEL
30	E0093-A	MS 9-16 BEAD	6063-T5
31	E0119-A	4 TRACK JAMB/HEAD/SILL (THERMAL)	6063-T5/POLYAMIDE
32	E0120-A	5 TRACK JAMB/HEAD/SILL (THERMAL)	6063-T5/POLYAMIDE
33	E0167-A	2 TRACK JAMB/HEAD/SILL (ADD-ON)	6063-T5
34	CD-ASTRAGAL	INSIDE CORNER DOOR ASTRAGAL SASH/STILE	6063-T5

1 SASH RAIL/STILE
6061-T5

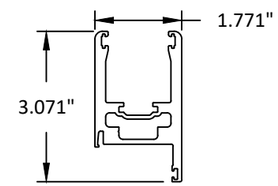

1A OPTIONAL SASH RAIL/STILE
6061-T5

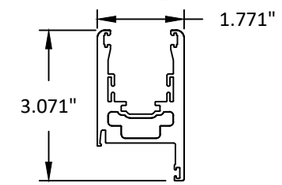

2 2 TRACK JAMB/HEAD/SILL
6063-T5/POLYAMIDE

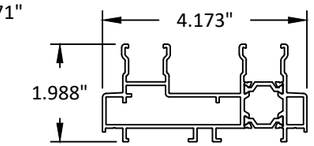

4 SNAP TRACK
6063-T5

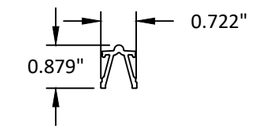

3 3 TRACK JAMB/HEAD/SILL
6063-T5/POLYAMIDE

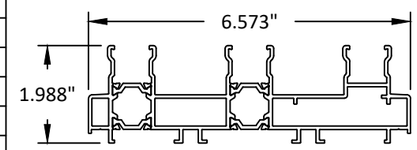

5 SASH END CAP
6063-T5

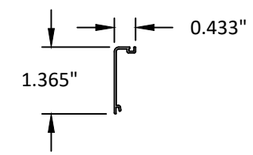

7 POCKET INTERLOCK
6063-T5

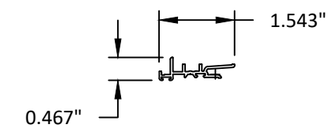

2A 2 TRACK JAMB/HEAD/SILL
6063-T5

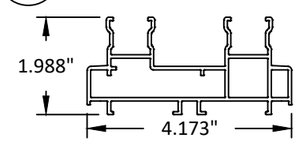

3A 3 TRACK JAMB/HEAD/SILL
6063-T5

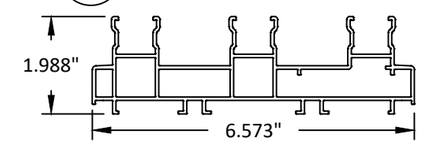

8 CONDENSATION ACC
6063-T5

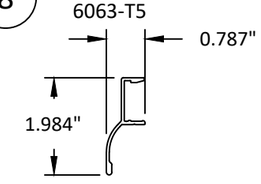

9 SASH/STILE INTERLOCK
6063-T5

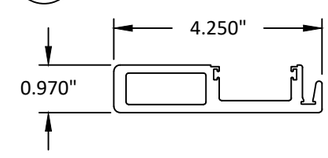

12 JAMB/HEADER TRIM
6063-T5

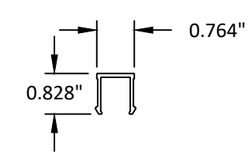

10 OUTSIDE CORNER ASTRAGAL STILE/SASH
6063-T5

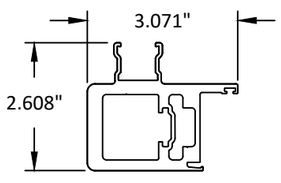

14 MS-REDUCER
6063-T5

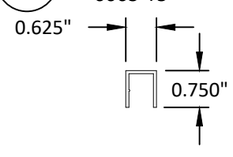

15 ROLLER 1
KEVLAR/STEEL

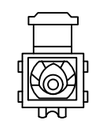

16 ROLLER 2
KEVLAR/STEEL

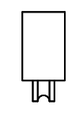

22 PAWL CATCHER
S/S STEEL

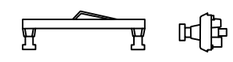

23 LOCKING LEVER
STEEL

euro-wall
SUPERIOR BY DESIGN

EURO-WALL, LLC
P.O. BOX 8007
NORTH PORT, FL 34290
PH: 888-989-3876

TITLE: MS MULTI-SLIDE SYSTEM (WZ3) (IMPACT)

BILL OF MATERIALS & COMPONENTS

PREPARED BY:
BUILDING DROPS, INC.
398 E. DANIA BEACH BLVD., STE. 338
DANIA BEACH, FL 33004
PH: (954)399-8478
FAX: (954)744.4738
WEB: www.buildingdrops.com

REMARKS	BY	DATE
INSIDE CORNER UPDT.	LL	01/22
ADD-ON TRACK UPDT	LL	05/22
CORNER UNIT UPDATE	LL	08/22
MISC. UPDATE	OL	06/23

THE INSTALLATION DETAILS DESCRIBED HEREIN ARE GENERIC AND MAY NOT REFLECT ACTUAL CONDITIONS FOR A SPECIFIC SITE. IF SITE CONDITIONS CAUSE INSTALLATION TO DEVIATE FROM THE REQUIREMENTS DETAILED HEREIN, A LICENSED ENGINEER OR ARCHITECT SHALL PREPARE SITE SPECIFIC DOCUMENTS FOR USE WITH THIS DOCUMENT.

HERMES F. NORERO LICENSE No. 73778 STATE OF FLORIDA PROFESSIONAL ENGINEER

HERMES F. NORERO P.E.
FLORIDA P.E. No 73778
BUILDING DROPS, INC
398 E. DANIA BEACH BLVD. # 338
DANIA BEACH, FL 33004
FBPE CERT. OF AUTHORIZATION No. 29578

FL #: FL34003

DATE: 11.19.20

DWG. BY: YC | CHK. BY: HFN

SCALE: NTS

DWG. #: EWS017

SHEET: 10 OF 11

10/19/2023 1:06 PM
z:\projects\euro-wall systems\fbc-23-0818 - fbc submittal - fbc submittal - ew holdings of florida llc name change\dwgs\fl34003\ews017.dwg

10/19/2023 1:06 PM

z:\projects\euro-wall systems\fbc-23-0818 - fbc submittal - ew holdings of florida llc name change\dwgs\fl34003\ews017.dwg

24 PAWL
S/S STEEL

26 MS 1 PIECE ASTRAGAL
6063-T5

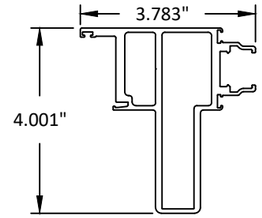

27 ASTRAGAL REINFORCEMENT
STEEL

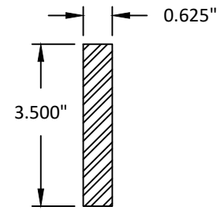

28 LARGE PAWL CATCHER
S/S STEEL

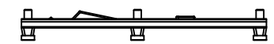

30 9/16" GLAZING BEAD
6063-T5

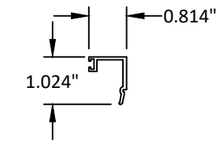

31 4 TRACK JAMB/HEAD/SILL
6063-T5/POLYAMIDE

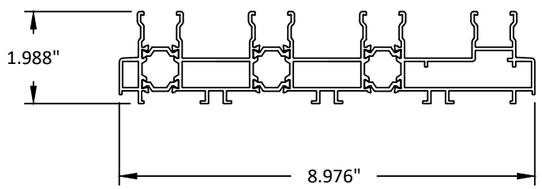

32 5 TRACK JAMB/HEAD/SILL
6063-T5/POLYAMIDE

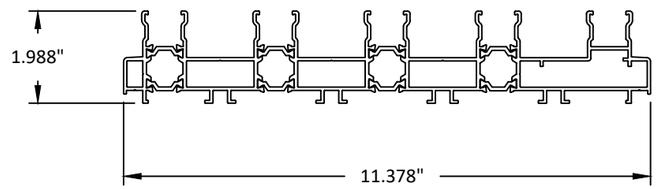

33 2 TRACK JAMB/HEAD/SILL (ADD-ON)
6063-T5

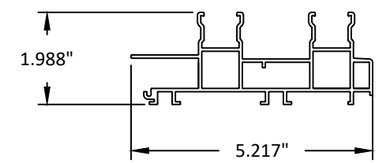

34 INSIDE CORNER ASTRAGAL STILE/SASH
6063-T5

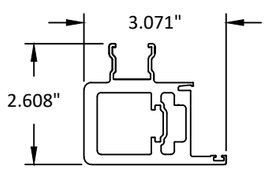

euro-wall
SUPERIOR BY DESIGN

EURO-WALL, LLC
P.O. BOX 8007
NORTH PORT, FL 34290
PH: 888-989-3876

TITLE: MS MULTI-SLIDE SYSTEM (WZ3) (IMPACT)

BILL OF MATERIALS & COMPONENTS (1)

PREPARED BY:
BUILDING DROPS, INC.
398 E. DANIA BEACH BLVD., STE. 338
DANIA BEACH, FL 33004
PH: (954)399-8478
FAX: (954)744.4738
WEB: www.buildingdrops.com

REMARKS	BY	DATE
INSIDE CORNER UPDT.	LL	01/22
ADD-ON TRACK UPDT	LL	05/22
CORNER UNIT UPDATE	LL	08/22
MISC. UPDATE	OL	06/23

THE INSTALLATION DETAILS DESCRIBED HEREIN ARE GENERIC AND MAY NOT REFLECT ACTUAL CONDITIONS FOR A SPECIFIC SITE. IF SITE CONDITIONS CAUSE INSTALLATION TO DEVIATE FROM THE REQUIREMENTS DETAILED HEREIN, A LICENSED ENGINEER OR ARCHITECT SHALL PREPARE SITE SPECIFIC DOCUMENTS FOR USE WITH THIS DOCUMENT.

HERMES F. NORERO
LICENSE
No. 73778
STATE OF
FLORIDA
PROFESSIONAL ENGINEER

HERMES F. NORERO P.E.
FLORIDA P.E. No 73778
BUILDING DROPS, INC
398 E. DANIA BEACH BLVD. # 338
DANIA BEACH, FL 33004
FBPE CERT. OF AUTHORIZATION No. 29578

FL #: FL34003

DATE: 11.19.20

DWG. BY: YC | CHK. BY: HFN

SCALE: NTS

DWG. #: EWS017

SHEET: 11 OF 11